INTERNSHIP PROJECT REPORT :

INTRODUCTION TO EMBEDDED SYSTEMS & IOT DEVICE DESIGN

TASK -1

BY

BASHEERAH BATOOL M

Topic - Motion Detection Alarm System

1. Introduction

The Motion Detection Alarm System is designed to detect human movement within a defined area and trigger an alert mechanism using visual and audio indicators. This system uses a Passive Infrared (PIR) sensor interfaced with an Arduino microcontroller to identify motion based on changes in infrared radiation emitted by living beings.

Unlike camera-based surveillance systems that require continuous processing and storage, PIR-based motion detection provides a low-cost, energy-efficient, and privacy-friendly solution for real-time monitoring applications.

My project demonstrates how embedded systems can be used to implement real-time event detection and response mechanisms using simple sensors and microcontroller-based decision logic.

2. Objective

The main objective of this system is:

- To detect human motion using infrared sensing
- To process sensor data using a microcontroller
- To generate an alert through buzzer and LED upon motion detection
- To develop a low-power, real-time monitoring system suitable for security and automation applications

3. System Components

Component	Function
Arduino Uno	Processes sensor signal and controls outputs
PIR Sensor	Detects motion using infrared radiation

LED	Provides visual alert
Buzzer	Provides sound alert
Resistor (220Ω)	Protects LED from overcurrent
Jumper Wires	Establish connections

4. Working Principle

The system operates on the principle of infrared radiation detection.

All living beings emit thermal infrared energy. The PIR sensor continuously monitors infrared radiation levels within its detection range.

Step-by-step Operation:

1. The PIR sensor contains two sensing elements.
2. When no movement occurs, both elements detect equal infrared radiation.
3. When a person moves across the sensor's field:
    - One sensing element detects a change in IR level before the other.
4. This creates a differential signal.
5. The PIR sensor converts this into a digital output signal.

- Output HIGH → Motion detected
- Output LOW → No motion

This output is sent to the Arduino.

The Arduino processes the signal and:

- Activates LED for visual indication
- Activates buzzer for audible alert

Once motion stops:

- Sensor output returns LOW

- Arduino turns OFF LED and buzzer

5. Circuit Diagram

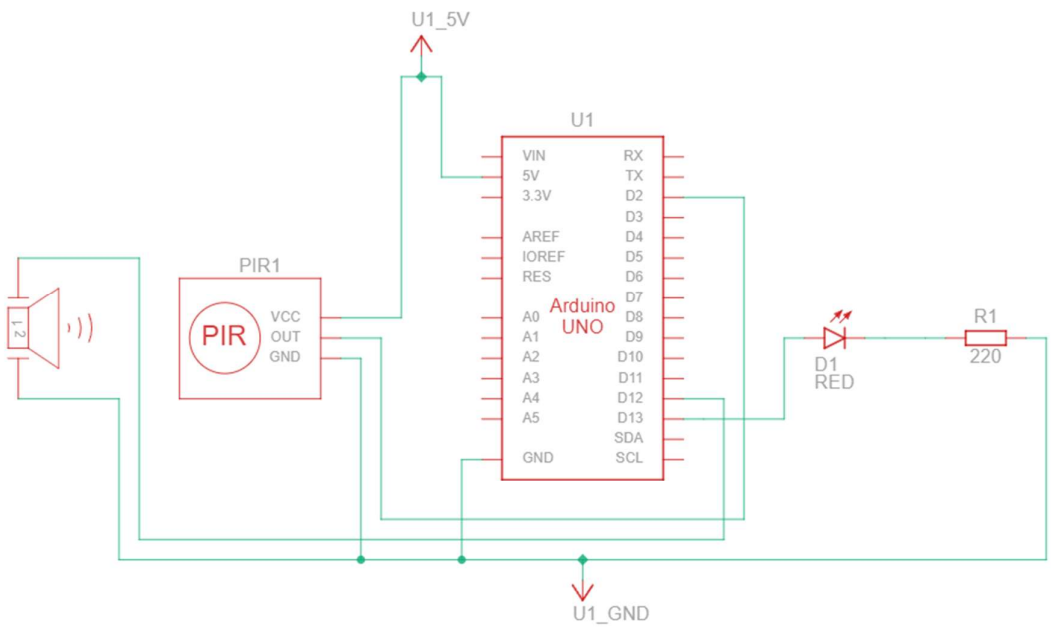

Connections:

PIR Sensor Pin	Arduino Pin
VCC	5V
GND	GND
OUT	Digital Pin 2

Output Device	Arduino Pin
LED (+)	Pin 13 via 220Ω resistor
LED (-)	GND
Buzzer (+)	Pin 12
Buzzer (-)	GND

The PIR sensor acts as the input module, while LED and buzzer form the output alert system.

6. System Architecture

The system follows a simple embedded control flow:

Sensing → Processing → Response

1. PIR senses motion
2. Arduino reads sensor signal
3. Arduino decides based on logic
4. Alert is triggered

This creates a real-time reactive system.

7. Arduino Code

```
int pirPin = 2;
int ledPin = 13;
int buzzerPin = 12;

int motionState = LOW;
int sensorValue = 0;

void setup() {
  pinMode(pirPin, INPUT);
  pinMode(ledPin, OUTPUT);
  pinMode(buzzerPin, OUTPUT);
  Serial.begin(9600);
}
```

```
void loop() {

  sensorValue = digitalRead(pirPin);

  if(sensorValue == HIGH) {
    digitalWrite(ledPin, HIGH);
    digitalWrite(buzzerPin, HIGH);

    if(motionState == LOW) {
      Serial.println("Motion Detected!");
      motionState = HIGH;
    }
  }

  else {
    digitalWrite(ledPin, LOW);
    digitalWrite(buzzerPin, LOW);

    if(motionState == HIGH) {
      Serial.println("Motion Stopped!");
      motionState = LOW;
    }
  }
```

```
  delay(200);
}
```

8. Code Explanation

Pin Initialization

Pins are defined for input (PIR) and outputs (LED & Buzzer).

Setup Function

Configures sensor as input and alert devices as output.

Motion Detection Logic

The system continuously reads PIR output.

If HIGH:

- Motion exists
- LED ON
- Buzzer ON

If LOW:

- No motion
- LED OFF
- Buzzer OFF

State Tracking

The variable motionState prevents repeated messages and ensures stable detection feedback.

9. Advantages

- Low power consumption
- Cost-effective

- Simple implementation
- Real-time detection
- Privacy-friendly (no camera needed)

10. Limitations

- Cannot detect stationary humans
- Sensitive to temperature fluctuations
- Limited range
- Cannot identify object type

11. Real-World Applications

1. **Security Systems**
   Used in home and office intrusion detection systems.
2. **Smart Lighting**
   Automatically activates lighting when movement is detected.
3. **Industrial Safety**
   Detects worker presence in hazardous zones.
4. **Automatic Doors**
   Used in malls and hospitals.
5. **Agricultural Monitoring**
   Detects animal intrusion in farms.
6. **Energy Conservation Systems**
   Prevents unnecessary power usage.

12. Future Enhancements

This basic system can be upgraded into:

- IoT-based monitoring system (like your HYDROSENSE / AgroNexus style architecture)
- GSM alert system

- Cloud logging system
- Camera-trigger integration
- AI-based activity classification

Real-World Application Scenario

Unauthorized Entry Detection in a Server Room

Problem Context

In many organizations, server rooms store critical infrastructure such as:

- Databases
- Networking equipment
- Surveillance storage
- Cloud access nodes

These areas are meant to be accessed only by authorized personnel.

But here's the operational reality:

- Doors are sometimes left unlocked
- Guards aren't always present
- CCTV is passive (records but doesn't react)
- Unauthorized entry may go unnoticed for hours

This creates a major risk:

Physical access = total system compromise

Even a few minutes of unauthorized presence can lead to:

- Data theft
- Hardware tampering
- Malware injection
- Network sabotage

Organizations need **instant detection**, not just recording.

Solution Using Motion Detection Alarm

The PIR-based Motion Detection Alarm can be deployed inside the server room as a secondary security layer.

System Placement

The PIR sensor is mounted:

- On the ceiling
- Facing entry zone or rack corridor

The Arduino-based alert unit is connected to:

- Buzzer (inside security office)
- LED indicator (outside restricted door)

Operational Scenario

Normal Condition

- Server room remains locked
- No movement inside
- PIR sensor continuously monitors IR levels
- Output remains LOW
- Alarm system inactive

Unauthorized Entry Event

Let’s say:

A cleaning staff member or unauthorized technician enters the server room without permission.

Step-by-step System Response

1. Human body emits infrared radiation.
2. PIR sensor detects change in thermal pattern.
3. Sensor output becomes HIGH.
4. Arduino reads signal immediately.
5. System triggers:
    - LED outside room → indicates activity inside
    - Buzzer at security desk → alerts personnel

Now instead of discovering intrusion later via CCTV review...

Security is alerted in real-time.

Immediate action becomes possible.

Outcome

Security personnel can:

- Reach the room instantly
- Verify authorization
- Prevent equipment tampering

Even if the person entered "by mistake", the system enforces accountability

13. Conclusion

The Motion Detection Alarm System successfully demonstrates the use of embedded sensing and control logic to implement a real-time alert mechanism. The system is scalable and forms the foundational building block for smart surveillance and automation systems.